Firming Renewables and Alleviating Transmission Constraints

The Role of Energy Storage

Brad Roberts
S&C Electric Company
&
Jeff Palermo
KEMA

High Plains Transmission Summit
Topeka
Lawrence, Kansas
November 3, 2009

Presentation Overview

- Impact of Renewables on Grid Operation
- Renewable Energy Integration to Grids
- Growing Energy Storage Options
  - Storage Technologies
  - Bulk vs. Distributed Storage
- Beneficial system functions of storage
- Impacts on transmission system

Impact of Renewables on Grid Operation

- Growth of wind resources remote from load centers
  - Mismatch between load and source peaks
  - Transmission constraints
- Large amounts of rooftop solar will start to impact distribution voltage control
- Achieving RPS standards will create need for more ancillary services and balancing energy sources to insure reliable performance of grid
- Optimizing bulk-power production is becoming much more difficult

Renewable Energy Integration to Grids

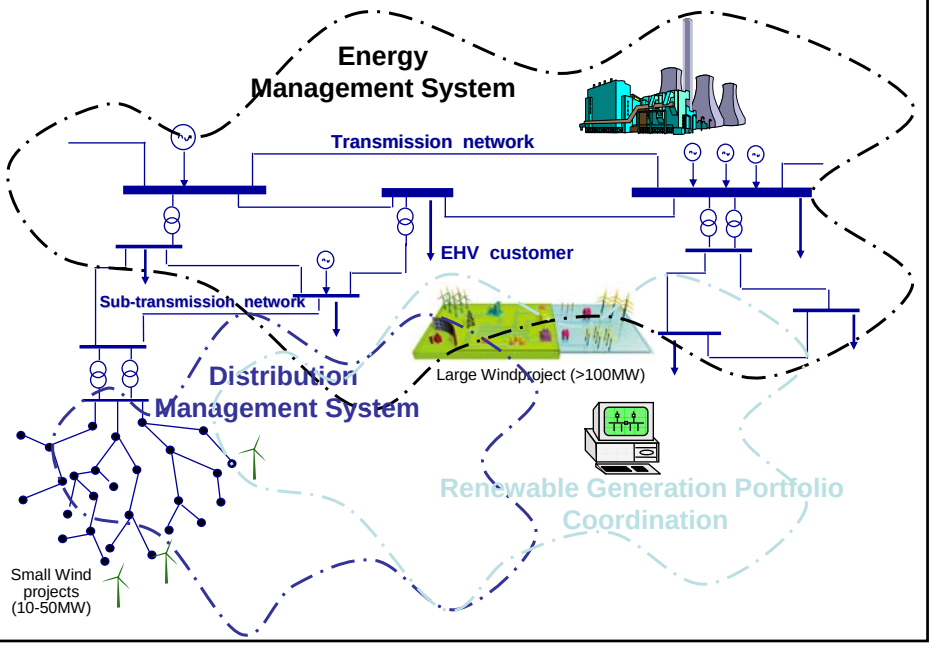

Wind power is not always there when you want it

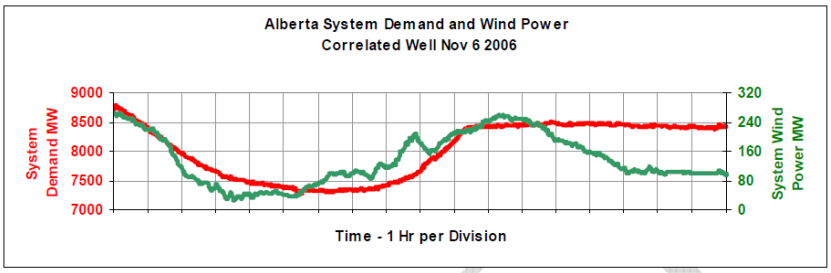

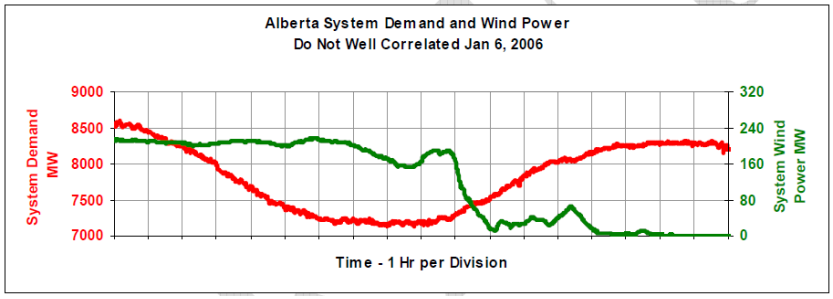

Value of Energy Storage

- Pumped hydro power has played a valuable role in grid operations
- Role of storage in the future grid is receiving more attention
- Storage will be a facilitator of Smart Grid deployment
- A “small amount” of storage will have a ‘large impact” on the future grid

Energy Storage Alternatives

- Pumped hydro
  - Typically greater than 200 MW and days of storage
- Compressed Air Energy Storage (CAES)
  - 50 - 500 MW based on blended gas/air generation
- Distributed Energy Storage System (DESS)
  -High temperature batteries up to 50 MW
  -Flywheels/lithium-ion up to 20 MW
- Community Energy Storage (CES)
  - 25 – 50 kW, 1 – 2 hour pad-mounted

Storage in the Grid Today

	US (MWs)	Globally (MWs)
Pumped Hydro	22,000	88,000
CAES	110	367
NAS	8	250
NiCad	26	0
Other	10	10
Totals	22,154	88,627

Pumped Hydro Storage

Compressed Air Energy Storage
115MW, 26 Hour System

Distributed Energy Storage

- 2 MW, 14.4 MWh in Bluffton, Ohio
- Two other identical sites in West Virginia and Indiana (2008)
- All with dynamic islanding

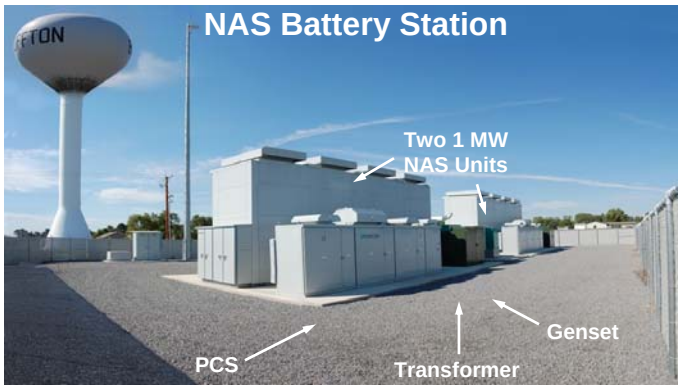

Distributed Energy Storage

- Load Following (peak shaving)

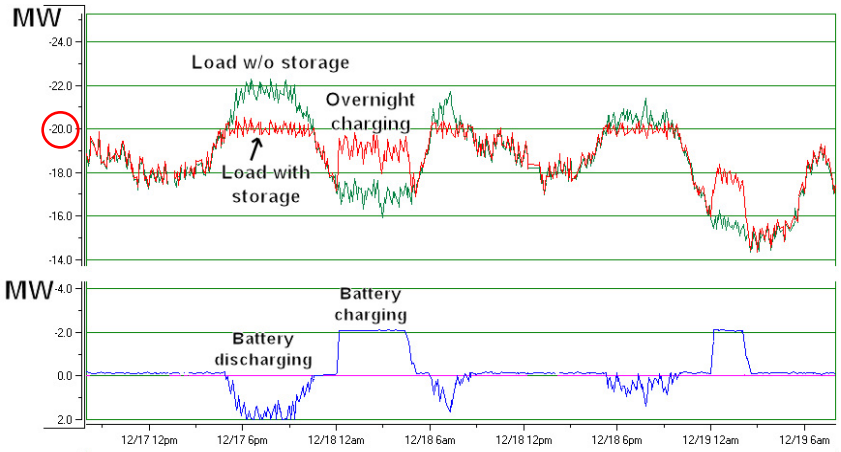

Performance of Balls Gap's 2MW Battery from 12/17 to 12/19/2008

Distributed Energy Storage
34 MW, 7 Hour Battery with 51 MW Windfarm

Time Shifting and Dispatch of Renewable Energy

WJS1

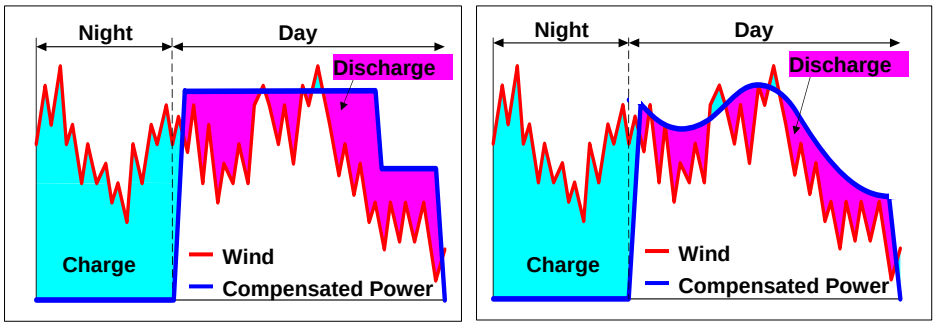

Wind farm output is stored (curtailed) if load-following reserves are not adequate.

Slide 14

WJS1 During discharge are we spilling wind in both examples below? Can the statement below be described further?

William J. Steeley, 10/13/2008

Flywheels (Kinetic Energy)

- Ancillary Service Application
  - 1.0Mw example (10 X 100Kw, 15 min.)

Lithium-Ion Battery
1.0MW, 15 min ancillary service

Community Energy Storage

- Improved service reliability and efficiency (close to customers)
- Voltage sag mitigation and emergency transformer load relief
- Multi-MW, Multi-hour ***when aggregated,*** (leverage AMI[1])
- Potentially low cost (synergy with PHEV[2])

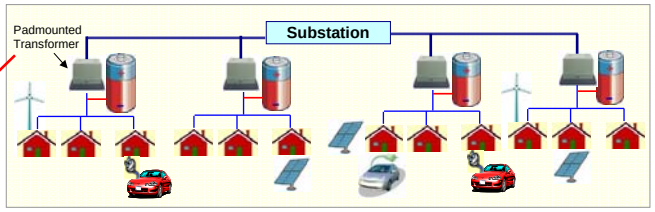

1- AMI = Advanced Metering Infrastructure
2- PHEV = Plug-in Hybrid Electric Vehicle

Storage's beneficial system functions

1. Peak-load shaving
2. Diurnal storage
3. Backup supply
4. Ancillary services
5. Energy price arbitrage
6. Power quality

Functions and locations

	Regional	Community	Project	Industrial	Home
Peak-load shaving	★	★		★	
Diurnal storage	★	★	★	★	★
Backup supply		★		★	★
Ancillary services	★	★	★		
Energy price arbitrage	★	★	★		
Power quality				★	★

System benefits

1. Peak-load shaving
2. Diurnal storage
3. Backup supply
4. Ancillary services
   a. Ramp-rate control (<10 minutes)
   b. Frequency regulation (<10 seconds)
   c. Spinning reserve (<30 minutes)
5. Energy price arbitrage
6. Power quality

Transmission benefit

Generation benefit

Mostly generation benefit

Transmission system benefits

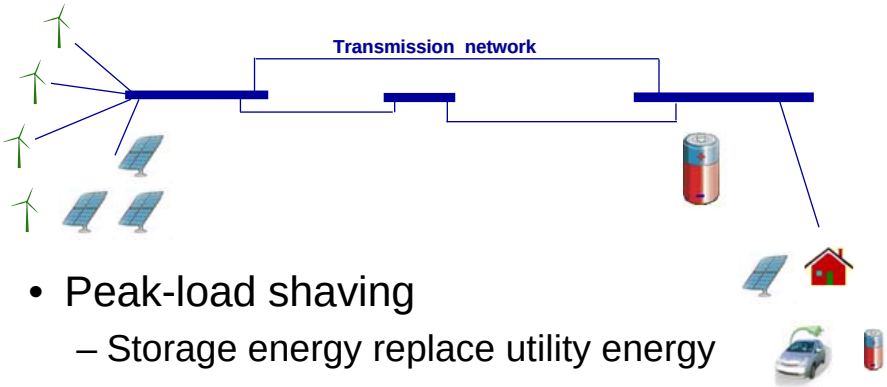

- Peak-load shaving
  - Storage energy replace utility energy
  - Mostly at user

Transmission system benefits

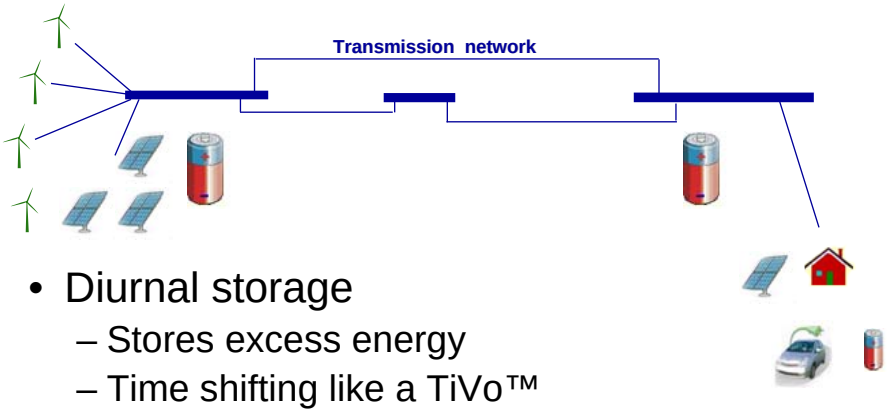

- Diurnal storage
  - Stores excess energy
  - Time shifting like a TiVo™
    - At source or
    - At user

Impacts on transmission systems

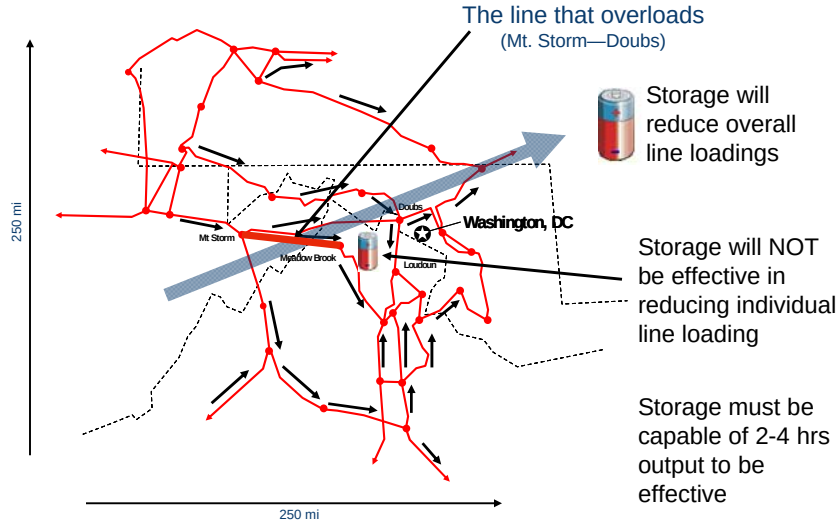

For further reference

- NERC Accommodating High Levels of Variable Generation
  www.nerc.com/files/IVGTF_Report_041609.pdf
- Department of Energy, Electricity Advisory Committee
  - Keeping the Lights On
  - Smart Grid: Enabler of the New Energy Economy
  - Bottling Electricity: Storage as a Strategic Tool for Managing Variability and Capacity Concerns in the Modern Grid

  Reports available at: http://www.oe.energy.gov/eac.htm
- IEEE Power & Energy Magazine Volume 7, Number 4, July/August 2009 "Energy Storage Issue"

  Available at: www.ieee-pes.org